LEDWIDE
LEDWIDE LIGHTING CO.,LTD

Tel: 0086 755 29362351 Direct: 0086 0 18680360436
Fax: 86 755 29014058 E-mail: info@ledwide.com
www.ledwide.com
Address:1-2/F, Building A2,Sinopol Ind.Park, First Industrial Zone, BaiHua communities, Guangming New District, Shenzhen, P.R. China Postcode: 518107

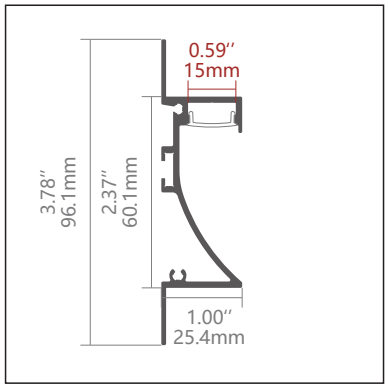

Aluminium LED Profile
LW-AW1N

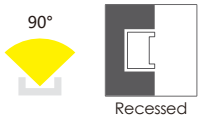



Installing Accessories

	Aluminum Endcap Code: AW1N-Cap-R		Aluminum Endcap Code: AW1N-Cap-L
 (Optional)	Joiners 60°B Code: J-60B	 (Optional)	Joiners 90°B Code: J-90B
 (Optional)	Joiners 120°B Code: J-120B	 (Optional)	Joiners 180°A Code: J-180A

Optional Diffuser (PMMA)

Color	Light Transmittance	Code
Opal	58%	D001-O
Milky	75%	D001-M
Frost	88%	D001-F
Clear	97%	D001-C
Black	21%	D001-B

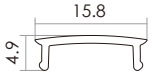

LEDWIDE
LEDWIDE LIGHTING CO.,LTD

Tel: 0086 755 29362351 Direct: 0086 0 18680360436
Fax: 86 755 29014058 E-mail: info@ledwide.com
www.ledwide.com
Address:1-2/F, Building A2,Sinopol Ind.Park, First Industrial Zone, BaiHua communities, Guangming New District, Shenzhen, P.R. China Postcode: 518107

Installing Instructions

Recessed

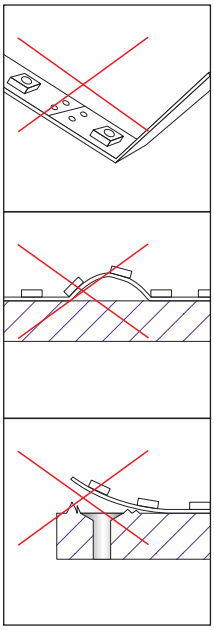

1.

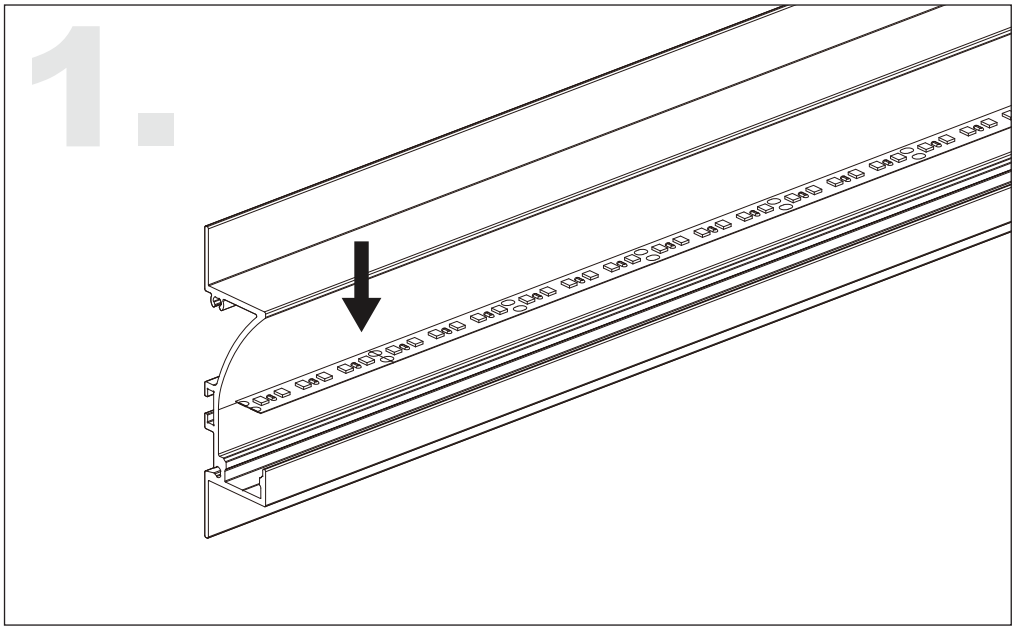

2.

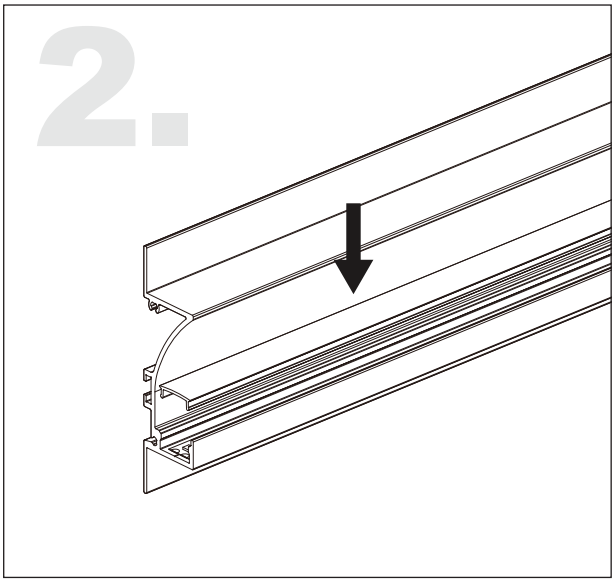

3.

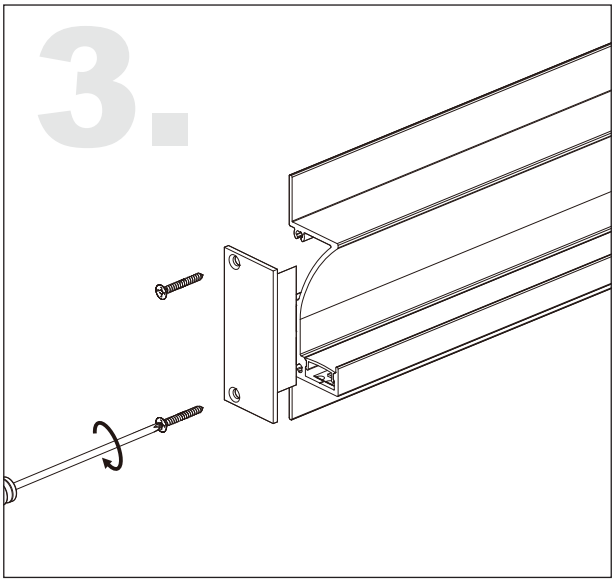

4.

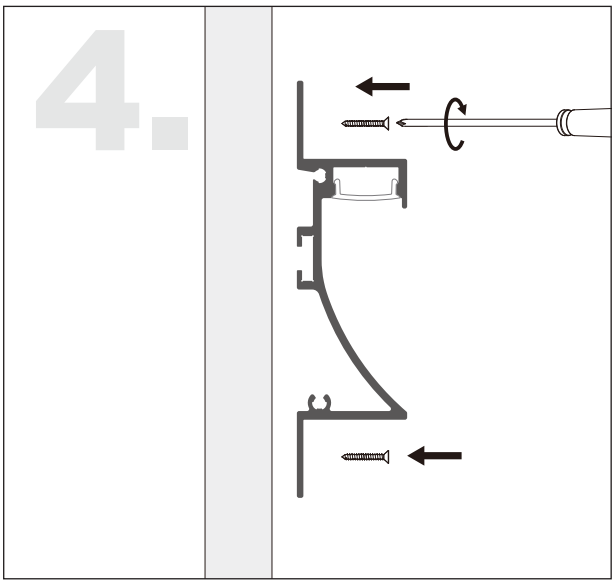

5.

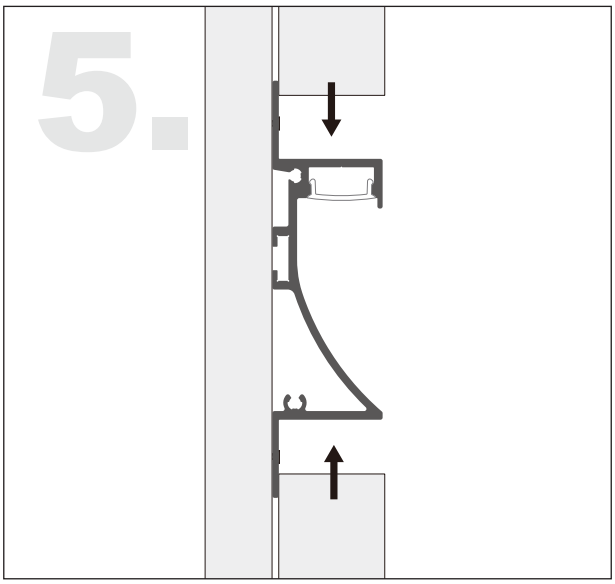

LEDWIDE
LEDWIDE LIGHTING CO.,LTD

Tel: 0086 755 29362351 Direct: 0086 0 18680360436
Fax: 86 755 29014058 E-mail: info@ledwide.com
www.ledwide.com
Address:1-2/F, Building A2,Sinopol Ind.Park, First Industrial Zone, BaiHua communities, Guangming New District, Shenzhen, P.R. China Postcode: 518107

Applicable Joiners

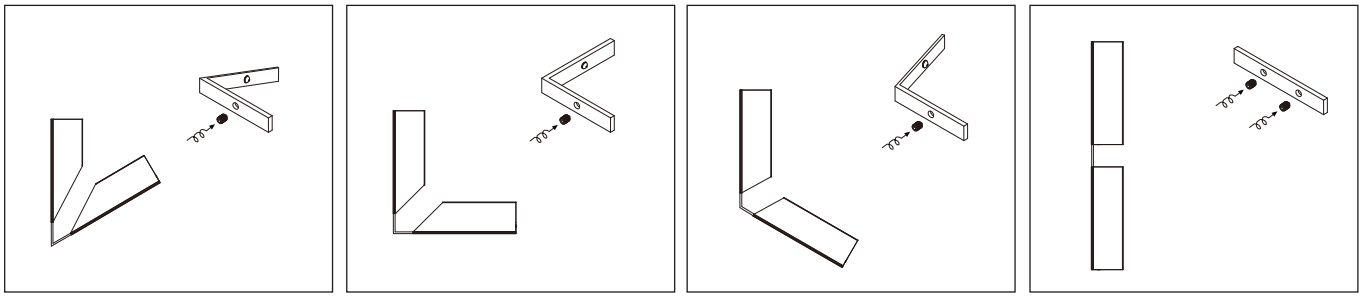

60°B 90°B 120°B 180°A

Application Diagram

